IP67 sealed serial FOUK-TRF

TRF28

gripping force curve

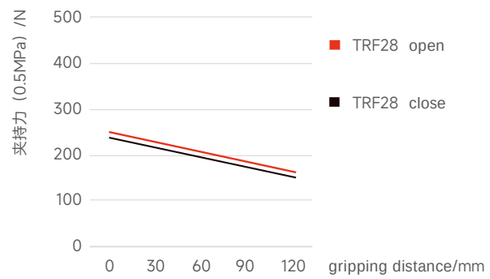

Static Bearing Torque

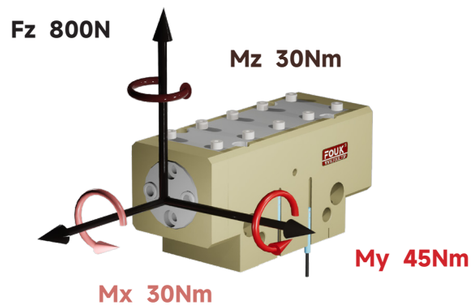

specification	TRF28	TRF28-NC	Unit
stroke per jaw	6	6	mm
product weight	0.4	0.5	kg
max gripping distance	60	60	mm
Theoretical Max. Gripping Force: Opening/Closing	60P/55P	-/55P	N
Air Consumptionper Opening-Closing Cycle	0.056	0.14	L
Min.spring force	/	120	N
air purge allowable pressure	0.2~0.5	0.2~0.5	bar
work piece weight	1	1	kg
opening/cosing time	0.02/0.02	0.04/0.02	s

max per finger weight/kg	0.3	air connection feature	M5
repeat accuracy/mm	± 0.01	temperature range/°C	-5~60
air pressure range/bar	3~8	IP class	67

air purge working can reach IP67
otherwiseIP54

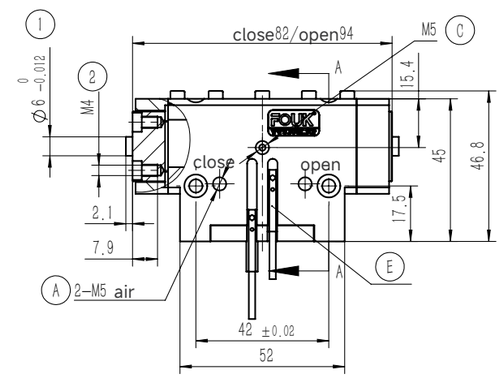

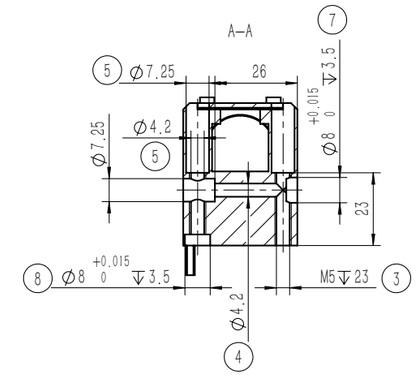

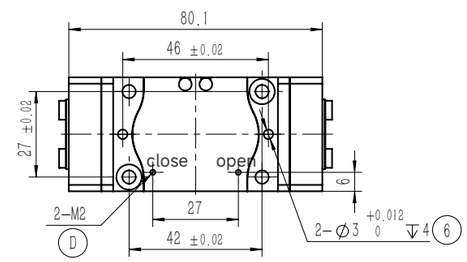

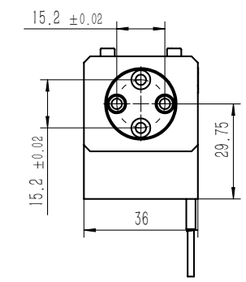

TRF28-NC

Built-inSpringwith MechanicalSelf-Locking

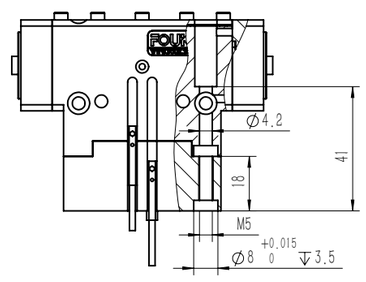

TRF28 hose free airconnection

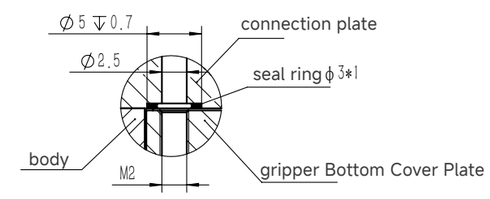

① Gripper Finger Locating Pin Bushing (Standard)
② finger mounting hole
③④⑤ gripper mounting hole
⑥⑦⑧ Mounting Locating Pin Hole

Ⓐ air connection
Ⓒ air purge/grease injection
Ⓓ hose free connection（Bversion）
Ⓔ Magnetic Proximity Sensor Position

Note: To achieve IP67 protection, the positive pressure air purge Ⓒ must be continuously supplied with compressed air at 0.02–0.05 MPa;otherwise, only IP54 protection is available.