IP67sealed serial FOUK-TRF

TRF117

TRF117

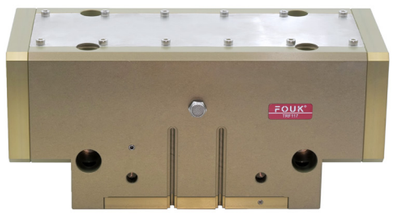

gripping force curve

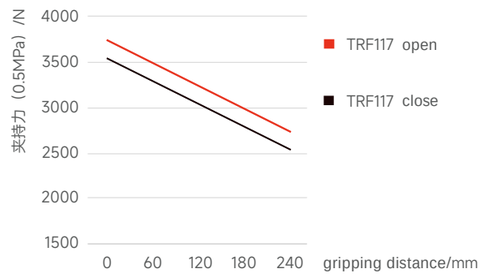

Static Bearing Torque

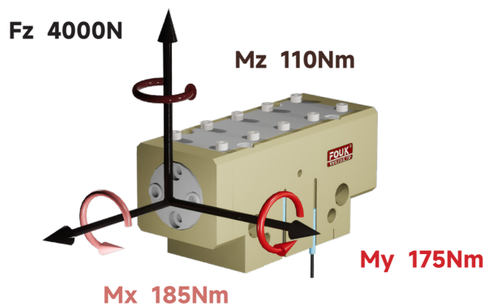

specification	TRF117	TRF117-NC	Unit
stroke per jaw	30	30	mm
product weight	12	14	kg
max gripping distance	240	200	mm
Theoretical Max. Gripping Force: Opening/Closing	754P/714P	-/714P	N
Air Consumptionper Opening-Closing Cycle	4	6.4	L
Min.spring force	/	990	N
air purge allowable pressure	0.2~0.5	0.2~0.5	bar
work piece weight	18.9	18.9	kg
opening/cosing time	0.5/0.5	0.9/0.45	s

max per finger weight/kg	7	air connection feature	G1/8
repeat accuracy/mm	± 0.04	temperature range/°C	-5~60
air pressure range/bar	3~8	IP class	67

air purge working can reach IP67
otherwiseIP54

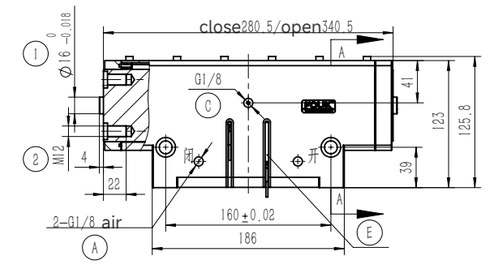

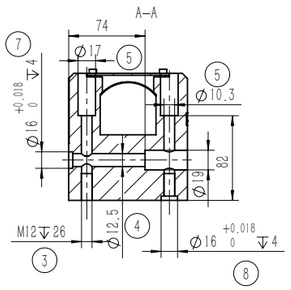

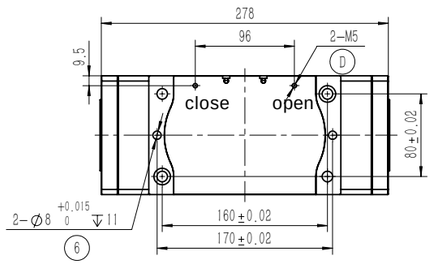

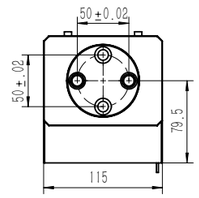

TRF117-NC

Built-inSpringwith MechanicalSelf-Locking

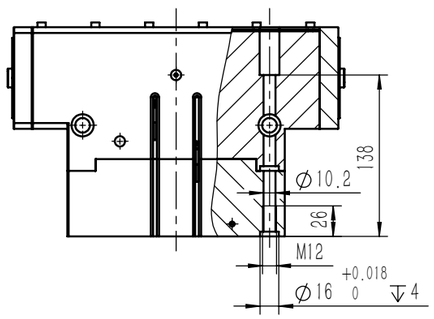

TRF117 hose free airconnection

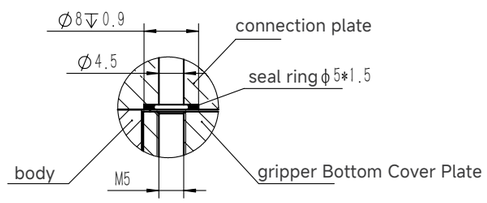

① Gripper Finger Locating Pin Bushing (Standard)
② finger mounting hole
③④⑤ gripper mounting hole
⑥⑦⑧ Mounting Locating Pin Hole

Ⓐ air connection
Ⓒ air purge/grease injection
Ⓓ hose free connection（Bversion）
Ⓔ Magnetic Proximity Sensor Position

Note: To achieve IP67 protection, the positive pressure air purgeⒸmust be continuously supplied with compressed air at 0.02–0.05 MPa;otherwise, only IP54 protection is available.