Toothed three-finger gripper series FOUK-FZ

FZ220-352-M/S

FZ220-352

Static load-bearing torque

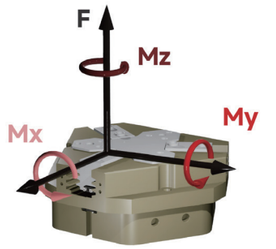

Mx 360Nm ■ Mz 270Nm
My 410Nm ■ F 7700N

Gripping force curve

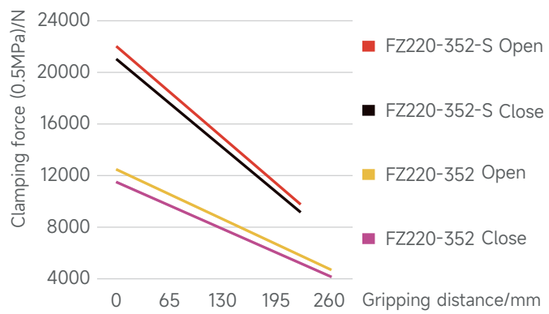

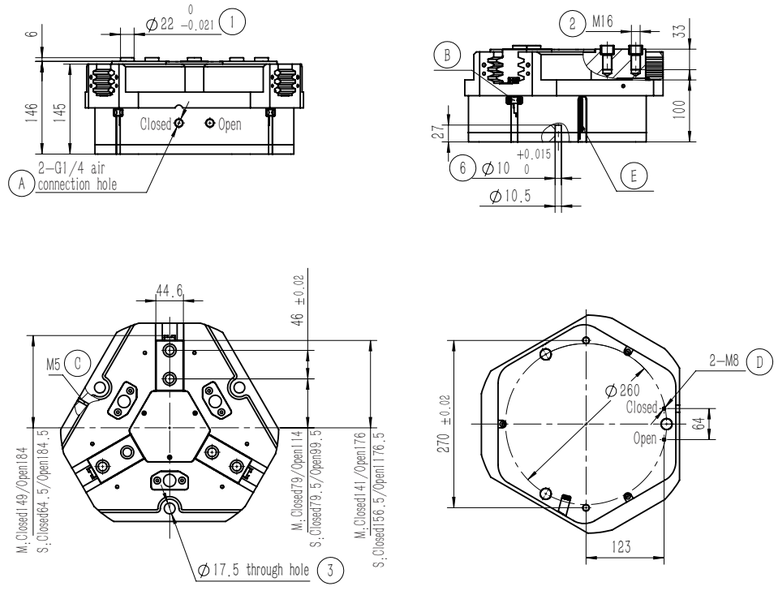

1. Gripping finger location pin bushing (standard)
2. Mounting hole of gripping finger
3. Gripper mounting hole
6. Mounting and positioning pin hole
A. Compressed air connection port
B. Location of inductive proximity sensor
C. Positive-pressure air blowing hole/grease injection hole
D. Bottom ventilation hole (version-B)
E. Location of magnetic proximity sensor

FZ 220 - 352 - S - B - C60 - P - NO - H

Serial No.	Cylinder bore	Maximum shell diameter	Short stroke	Ventilation at bottom	Length of push rod	Dust cover IP64	Self-locking form	High temperature resistance
FZ: Toothed three-finger gripper			S: Increased gripping force /: Standard version M	/: Ventilation on the side	C60: 60mm C90: 90mm /: Without push plate	/: Without dust cover	NO: Self-locking by opening NC: Self-locking by closing /: Without self-locking	H: -5~240°C /: 0~60°C

Inductive proximity sensor

IPSD-2NS-0848-L3	Inductive, NPN, 3-core3m
IPSD-2PS-0848-L3	Inductive, PNP, 3-core3m

Magnetic proximity sensor

MZC2-1V7NS-FU0	Magnetic, NPN, 3-core3m
MZC2-1V7PS-FU0	Magnetic, PNP, 3-core3m

*Two sensors are required for each gripper. For the detailed monitoring of two positions, see the sensor appendix.

Product attributes	FZ220-352	FZ220-352-NO	FZ220-352-NC	FZ220-352-S	FZ220-352-S-NO	FZ220-352-S-NC	Unit
Single stroke	35	35	35	20	20	20	mm
Product weight	34	44	40	34	44	40	kg
Maximum allowable gripping distance	260	260	260	220	220	220	mm
Theoretical maximum gripping force: opening/closing	2500P/2400P	2500P/-	-/2400P	4400P/4200P	4400P/-	-/4200P	N
Gas consumption of single opening and closing cycle	17	23	23	17	23	23	L
Minimum Spring Locking Force		3800	3600		6700	6400	N
Workpiece weight	80	80	80	130	130	130	kg
Opening/closing time	1.3/1.3	1.2/2	2.5/1.2	1.3/1.3	1.2/2	2.5/1.2	s

P: Compressed air pressure [bar]
Gas consumption: volume of gas consumed at normal pressure (0.5MPa)

Maximum allowable single-finger gripping weight/kg	12	Specification of air connection port	G1/4
Repeated gripping accuracy/mm	± 0.05	Temperature range of application/°C	-5~60
Operating air pressure range/bar	3~8	IP rating	40

FZ220-352-C60 Pushing

The length A of the push rod can be of the standard version or the extended version, with loading function, and the minimum thrust of the push plate is 300N.

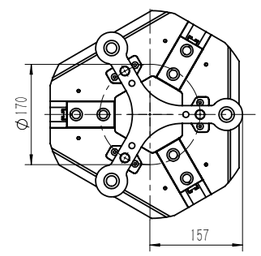

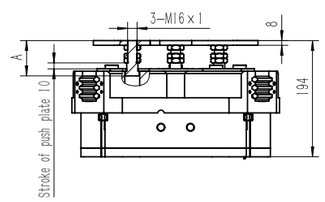

FZ220-352-NC/NO Self-locking

Built-in spring, mechanical self-locking

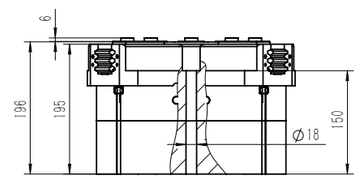

FZ220-352-P Dust-proof

Dust-proof module, IP64 for the positive-pressure air blowing hole after it, is connected to the compressed air of 0.05-0.10MPa, otherwise, IP50

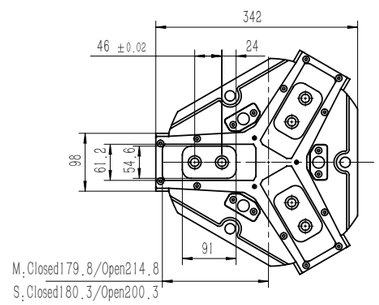

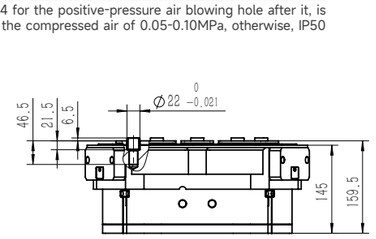
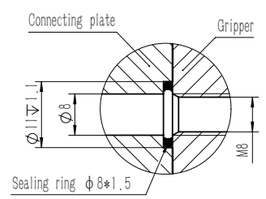
FZ220-352-B Ventilation at bottom