Toothed three-finger gripper series FOUK-FZ

FZ34-68

Static load-bearing torque

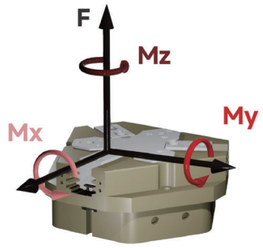

- Mx 24Nm
- Mz 17Nm
- My 28Nm
- F 550N

Gripping force curve

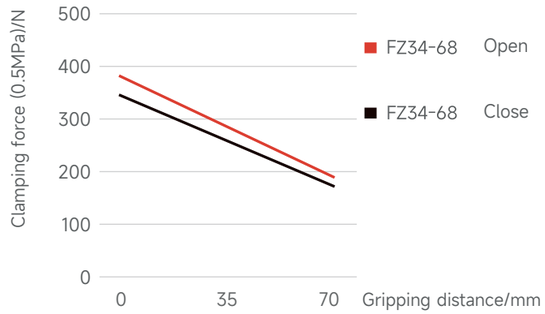

FZ	34	-	68	-	B	-	C18	-	P	-	NO	-	H
Serial No.	Cylinder bore		Maximum shell diameter		Ventilation at bottom		Length of push rod		Dust cover IP64		Self-locking form		High temperature resistance

FZ	Toothed three-finger gripper
/	Ventilation on the side
C18	18.5mm
C26	26.5mm
/	Without push plate
/	Without dust cover
NO	Self-locking by opening
NC	Self-locking by closing
/	Without self-locking
H	-5~240°C
/	0~60°C

Inductive proximity sensor

IPSD-2NS-0818-L3	Inductive, NPN, 3-core3m
IPSD-2PS-0818-L3	Inductive, PNP, 3-core3m

Magnetic proximity sensor

MZC2-1V7NS-FU0	Magnetic, NPN, 3-core3m
MZC2-1V7PS-FU0	Magnetic, PNP, 3-core3m

*Two sensors are required for each gripper. For the detailed monitoring of two positions, see the sensor appendix.

Product attributes	FZ34-68	FZ34-68-NO	FZ34-68-NC	Unit
Single stroke	6	6	6	mm
Product weight	0.35	0.41	0.42	kg
Maximum allowable gripping distance	70	70	70	mm
Theoretical maximum gripping force: opening/closing	76P/69P	76P/-	-/69P	N
Gas consumption of single opening and closing cycle	0.09	0.13	0.11	L
Minimum Spring Locking Force		140	140	N
Workpiece weight	1.7	1.7	1.7	kg
Opening/closing time	0.04/0.04	0.03/0.05	0.05/0.03	s

P: Compressed air pressure [bar]
Gas consumption: volume of gas consumed at normal pressure (0.5MPa)

Maximum allowable single-finger gripping weight/kg	0.25	Specification of air connection port	M5
Repeated gripping accuracy/mm	± 0.02	Temperature range of application/°C	-5~60
Operating air pressure range/bar	3~8	IP rating	40

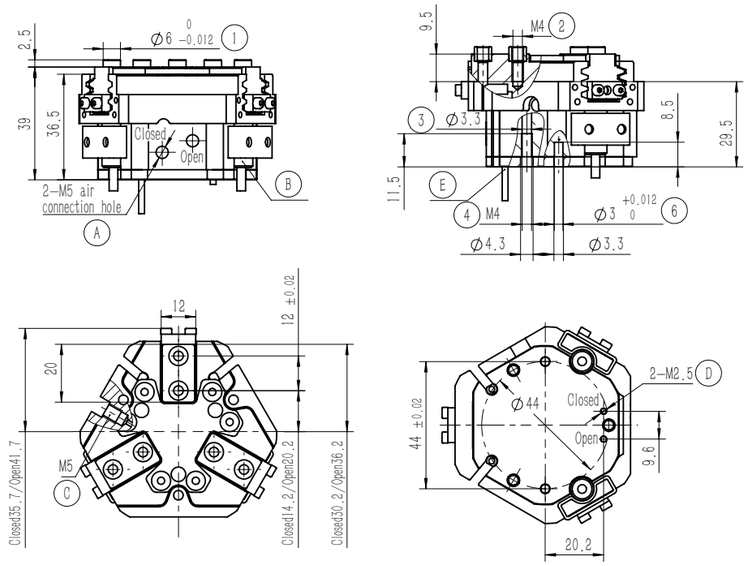

1. Gripping finger location pin bushing (standard)
2. Mounting hole of gripping finger
3. 4 Gripper mounting hole
6. Mounting and positioning pin hole
A. Compressed air connection port
B. Location of inductive proximity sensor
C. Positive-pressure air blowing hole/grease injection hole
D. Bottom ventilation hole (version-B)
E. Location of magnetic proximity sensor

FZ34-68-C18 Pushing

The length A of the push rod can be of the standard version or the extended version, with loading function, and the minimum thrust of the push plate is 10N. If it is dust-proof and provided with the push plate, the stroke is 3.

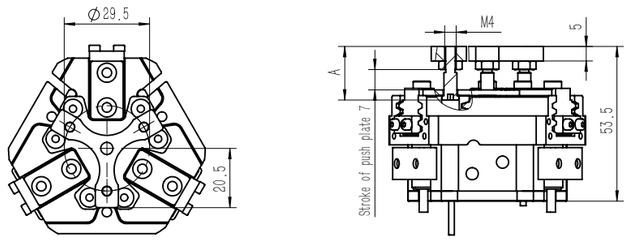

FZ34-68-NC/NO Self-locking

Built-in spring, mechanical self-locking

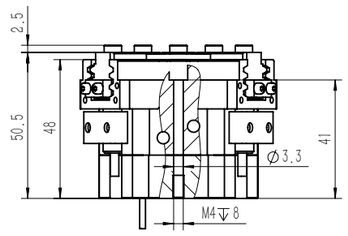

FZ34-68-P Dust-proof

Dust-proof module, IP64 for the positive-pressure air blowing hole after it, is connected to the compressed air of 0.05-0.10MPa, otherwise, IP50

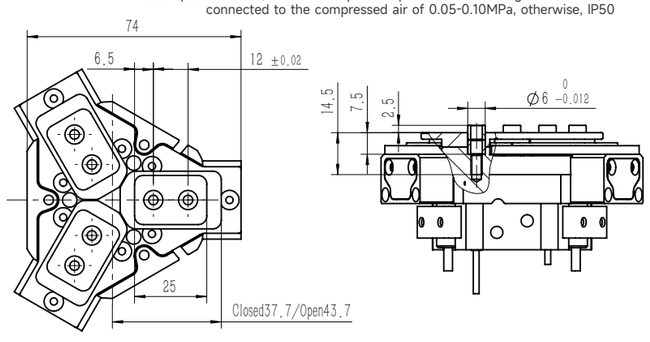
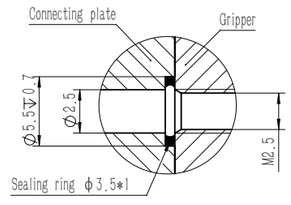
FZ34-68-B Ventilation at bottom